# DH-MV-S5501MG00E



- Movidius Myraid 2 VPU
- 512MB RAM & 512MB NAND
- Conform to CE, FCC and RoHS certifications
- Software trigger/Hardware trigger/Free run mode
- Embedded algorithm: code-reading
- 1Gbps Ethernet industrial interface, max 100m transmission

## Specification

| Model | Sensor | Sensor type | Shutter | Resolution | Frame rate ( fps ) | Bit depth | Interface | Mono/Color | Pixel size ( μm ) | Sensor size |
|---|---|---|---|---|---|---|---|---|---|---|
| DH-MV-S5501MG00E | Python 5000 | CMOS | Global | 2590x2046 | 15 | 10 | GigE | Mono | 4.8x4.8 | 1" |

| | |
|---|---|
| Model | DH-MV-S5501MG00E |
| Effective Pixels | 5MP |
| Processor | Movidius Myraid 2 VPU |
| SNR | >38dB |
| Dynamic Range | 60dB |
| Interface | M12 8-pin Ethernet, M12 12-pin GPIO |
| GPIO | 12 pins I/O connector, RS232/485(optional): 1ch input, 1ch output; Opto-isolated:3ch input; 3ch output |
| Memory | 512MB RAM and 512MB non-volatile flash memory |
| Exposure Time | 4μs~1s |
| Trigger Mode | Software trigger/Hardware trigger/Free run mode |
| SDK | SVStudio |
| Dimensions | 68mm x 55mm x 28mm( not including lens mount and height of connectors) |
| LED indicator | 5 LED indicators represent system, network, trigger and 2 sets of user-defined configurations |
| Lens mount | Support C-mount, M12 mount and optional built-in illumination |
| Power Supply | Support 8~26V DC wide range power supply |
| IP Rating | IP67 with lens cover |
| Temperature | Storage temperature: -30° C~ + 80° C; Operation temperature: -20° C~+50° C |

Rev 001.001 2018 Dahua. All rights reserved. Design and specifications are subject to change without notice.

## Spectrogram

S5501MG00E

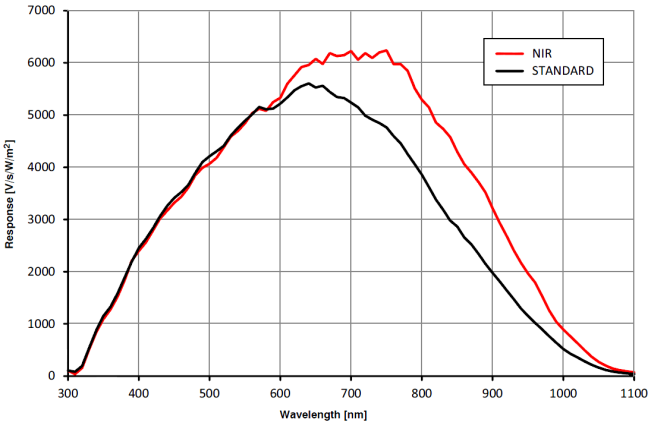


Quantum Efficiency Curve for Mono Sensor

## Dimensions

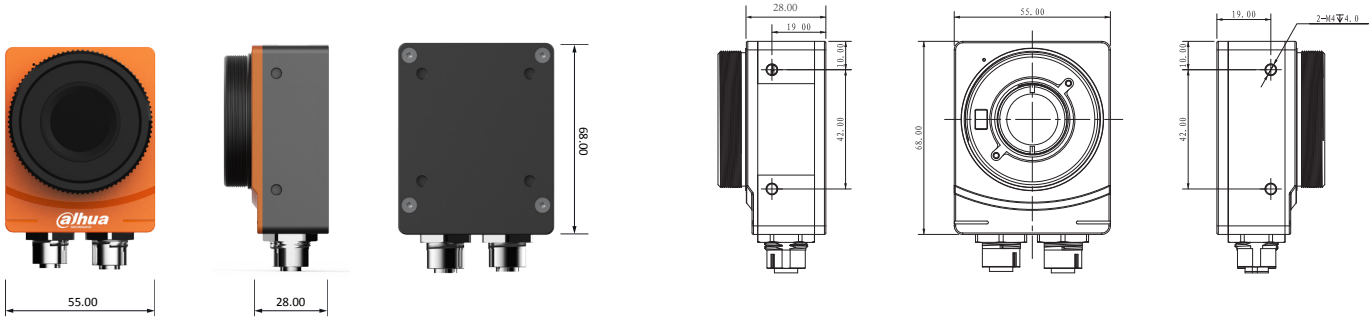


## IO Interface Instruction

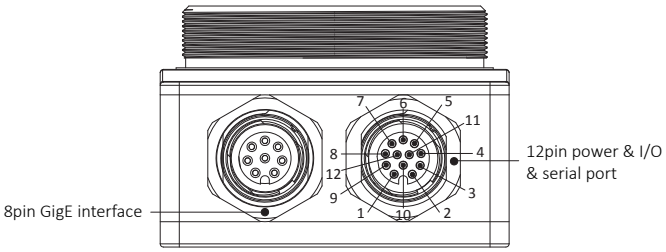


| Pin | Signal | Description |
|---|---|---|
| 1 | OPTO_IN1 | Opto-isolated input 1 |
| 2 | OPTO_IN2 | Opto-isolated input 2 |
| 3 | OPTO_OUT1 | Opto-isolated output 1 |
| 4 | OPTO_OUT2 | Opto-isolated output 2 |
| 5 | RXD\B(-) | Serial port input |
| 6 | OPTO_IN_GND | Opto-isolated in ground |
| 7 | POWER | DC 8V-24V input |
| 8 | GND | Power ground |
| 9 | OPTO_OUT_GND | Opto-isolated out ground |
| 10 | OPTO_IN0 | Opto-isolated input 0 |
| 11 | OPTO_OUT0 | Opto-isolated output 0 |
| 12 | TXD\A(+) | Serial port output |