

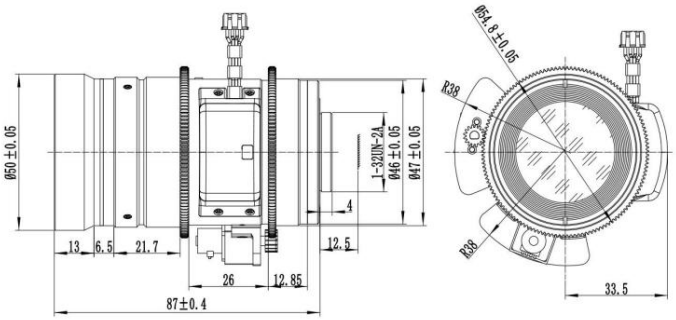

Focal Length:	11-50mm±5%			
Format:	1/1.7"			
Resolution:	8MP			
Aperture:	F1.4			
Mount:	CS			
Field Angle D×H×V(°):		1/1.7"	1/1.8"	1/2”
	D (°)	47~10.9	44.2~10.4	39.5~9.4
	H (°)	36.9~8.8	38.1~9	31.2~7.5
	V (°)	27.2~6.6	21~5.1	23.1~5.6
Optical Distortion:	-10.7~0.07% (1/1.7")			
MOD:	1.5m			
Coating Range:	400-900nm			
Flange BFL:	12.5mm(in air)			
BFL:	>8.26mm(in air)			
MBF:	>6.95mm(in air)			
Weight:	267±5g			
CRA:	0.16°(Wide); 0°(Tele)			
Dimension:	Φ50x87mm			
IR Correction:	YES			
Operating temperature	-30℃～+70℃			
Operation:	Iris	P-Iris		
	Focus	Motorized		
	Zoom	Motorized		
Model:	ACVRP8-1150-M			