CH1024-L-5-1,3-A

5mm f/1.3 Optical Athermalized Infrared Lens

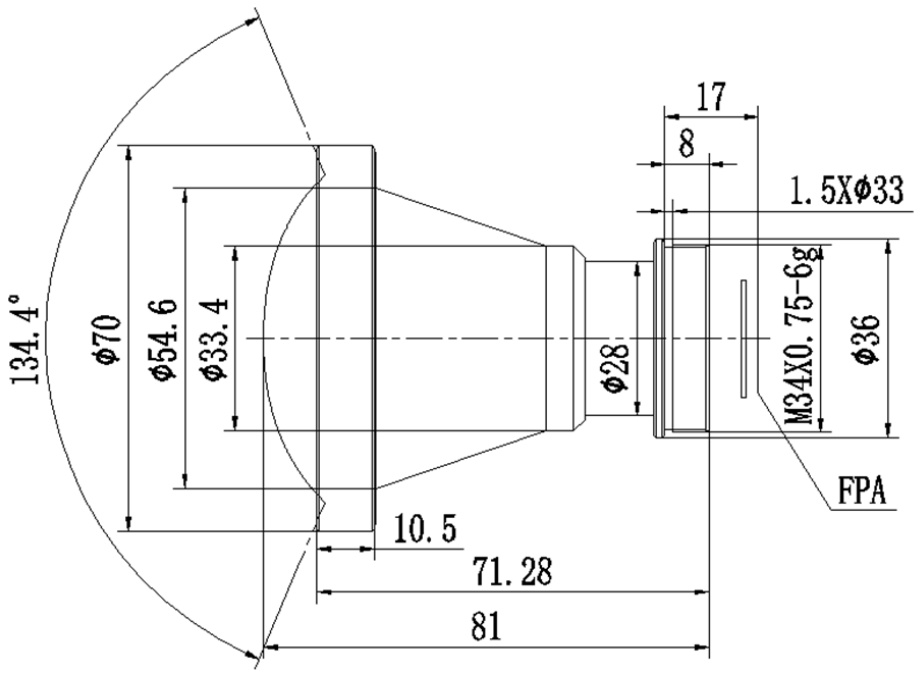

HFOV	160x120	320x240	336x256	384x288	640x480	640x512	1024x768
17μm	30.4 °	57.1 °	59.5 °	66.3 °	94.8 °	94.8 °	
14μm	25.3 °	48.3 °	50.4 °	56.5 °	83.7 °	83.7 °	110.2 °
12μm	21.7 °	42.0 °	43.9 °	49.5 °	75.0 °	75.0 °	101.7 °

Optical

Focal Length	5mm
F/#	1.3
Wavelength	8-12μm

Mechanical

Interface	Thread
Focus Mechanism	Fixed Athermalized
Dimensions (mm)	Ø70x81
Weight	<225g

Environmental

Sealing	IP67
Operating Temperature	-40°C to +60°C
Storage Temperature	-60°C to +85°C
External Coating	HD