DH-MV-S5500MG00E



- Movidius Myraid 2 VPU
- 512MB RAM & 512MB NAND
- Conform to CE, FCC, RoHS certifications
- Software trigger/Hardware trigger/Free run mode
- Embedded algorithm: code-reading
- 1Gbps Ethernet industrial interface, max 100m transmission

Specification

Model	Sensor	Sensor type	Shutter	Resolution	Frame rate (fps)	Bit depth	Interface	Mono/Color	Pixel size (μm)	Sensor size
DH-MV-S5500MG00E	IMX264	CMOS	Global	2448x2048	15	10	GigE	Mono	3.45x3.45	2/3"

Model	DH-MV-S5500MG00E
Effective Pixels	5MP
Processor	Movidius Myraid 2 VPU
SNR	>38dB
Dynamic Range	60dB
Interface	M12 8-pin Ethernet, M12 12-pin GPIO
GPIO	12 pins I/O connector, RS232/485(optional): 1ch input, 1ch output; Opto-isolated:3ch input; 3ch output
Memory	512MB RAM and 512MB non-volatile flash memory
Exposure Time	16μs~1s
Trigger Mode	Software trigger/Hardware trigger/Free run mode
SDK	SVStudio
Dimensions	68mm x 55mm x 28mm(not including lens mount and height of connectors)
LED indicator	5 LED indicators represent system, network, trigger and 2 sets of user-defined configurations
Lens mount	Support C-mount, M12 mount and optional built-in illumination
Power Supply	Support 8~26V DC wide range power supply
IP Rating	IP67 with lens cover
Temperature	Storage temperature: -30° C~ + 80° C; Operation temperature: -20° C~+50° C

Rev 001.001 2018 Dahua. All rights reserved. Design and specifications are subject to change without notice.

Spectrogram

S5500MG00E

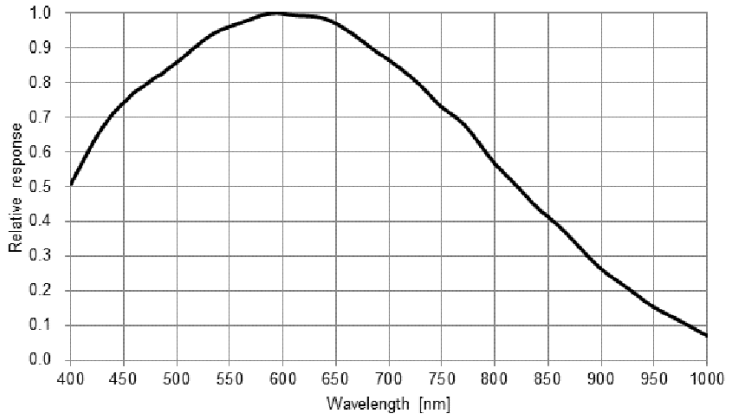

Quantum Efficiency Curve for Mono Sensor

Dimensions

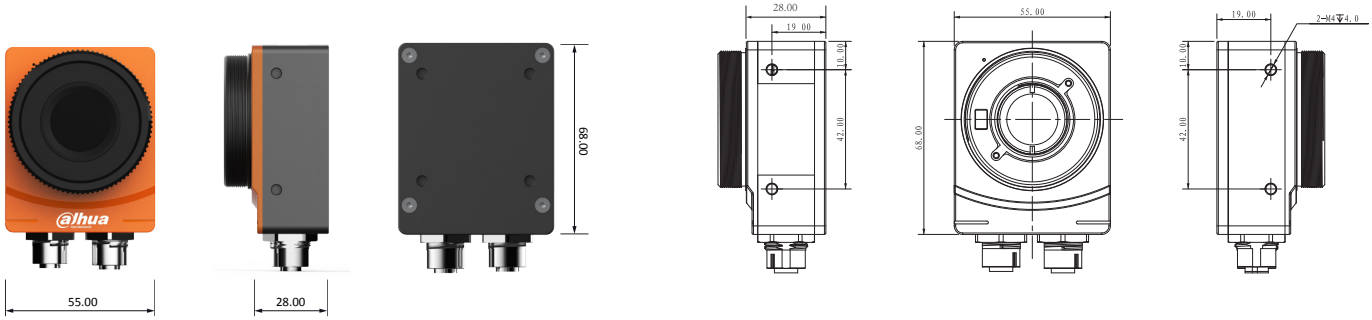

IO Interface Instruction

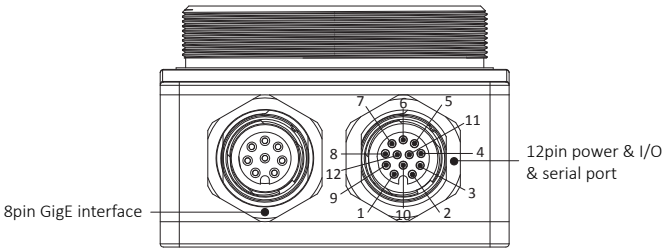

Pin	Signal	Description
1	OPTO_IN1	Opto-isolated input 1
2	OPTO_IN2	Opto-isolated input 2
3	OPTO_OUT1	Opto-isolated output 1
4	OPTO_OUT2	Opto-isolated output 2
5	RXD\B(-)	Serial port input
6	OPTO_IN_GND	Opto-isolated in ground
7	POWER	DC 8V-24V input
8	GND	Power ground
9	OPTO_OUT_GND	Opto-isolated out ground
10	OPTO_IN0	Opto-isolated input 0
11	OPTO_OUT0	Opto-isolated output 0
12	TXD\A(+)	Serial port output