L5163MX140-4E



- CoaXPress applies CXP-6 with a theoretical 4*6.25G bandwidth
- Support multiple image data formats
- Supports flat field correction for multiple user groups
- Software trigger/Hardware trigger/Free run mode
- Conforms to CoaXPress protocol and GenlCam standard

Specification

Model	Sensor	Sensor type	Resolution	Line rate （Hz）	Bit depth	Interface	Mono/Color	Pixel size(μm)
L5163MX140-4E	E2V	CMOS	16384x4	140K	12	CoaXPress	Mono	5x5

Model	L5163MX140-4E
SNR	45.5dB
Dynamic Range	73dB
Sensitivity	450LSB/(nJ/cm²)
GPIO	CoaXPress 4X Links
Image Format	Mono8/10/12
Gain	X1~X4
Exposure Time	1.5μs~6553.5μs
Dimensions	100mmx156mmx29.8mm(not including lens mount and rear case connector)
Flat Field Correction	Support FFC
Weight	700g
Power Supply	PoCXP/ support DC24V wide-range power supply
Lens Mount	M95×1
Power Consumption	18W
Lens Mount	C
Temperature	Storage temperature:-30° C~ + 80° C; Operation temperature:-30° C~+50° C

Spectrogram

L5163MX140-4E

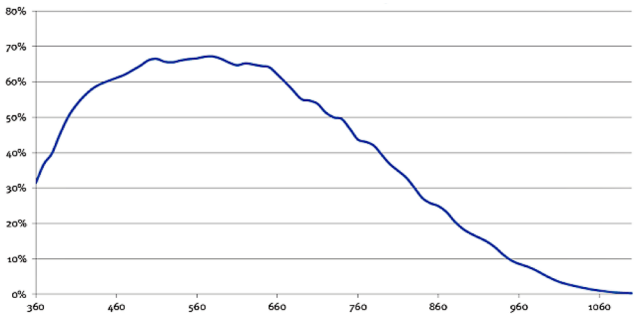

Quantum Efficiency Curve for Mono Sensor

Dimensions

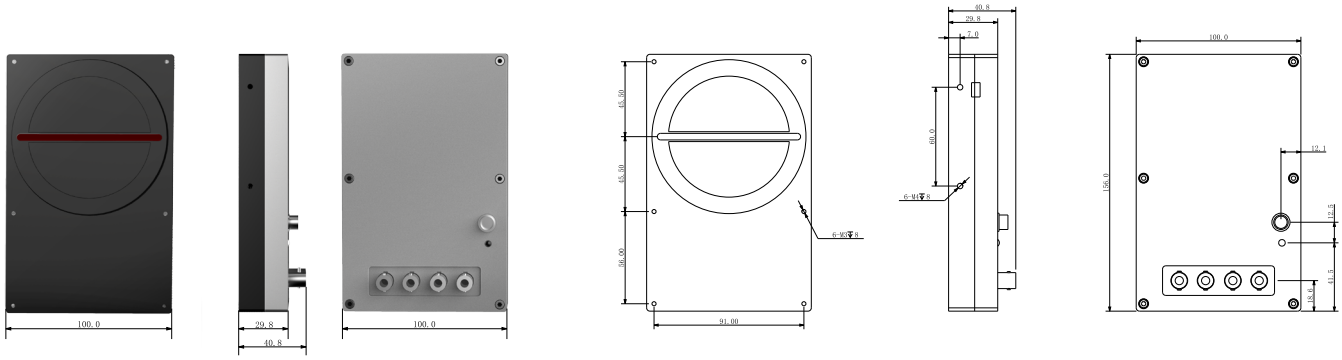

IO Interface Instruction

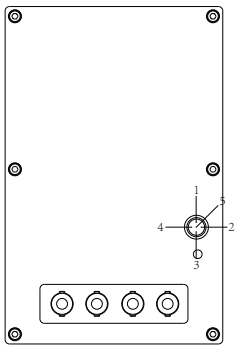

Pin	Signal
1	LVDS IN1+/TTL IN1
2	LVDS IN1-
3	LVDS IN2+/TTL IN2
4	LVDS IN2-
5	GND

CAM-DHUA31-08/2019 · Subject to technical change without notice. No liability is accepted for errors which may be contained in this document.