DH-MV-L5083MK100-4E



- CameraLink interface supports Full/Medium/Base mode with theoretical maximum 5.44G bandwidth
- Support multiple image data formats
- Supports flat field correction for multiple user groups
- Software trigger/Hardware trigger/Free run mode
- Conforms to Camera Link protocol and GenICam standard

Specification

Model	Sensor	Sensor type	Resolution	Line rate （Hz）	Bit depth	Interface	Mono/Color	Pixel size(μm)
DH-MV-L5083MK100-4E	E2V	CMOS	8192x4	100K	12	CameraLink	Mono	5x5

Model	DH-MV-L5083MK100-4E
SNR	40dB
Dynamic Range	70.7dB
Sensitivity	450LSB/(nJ/cm²)
GPIO	Camera Link is used for camera control and data transmission
Image Format	Mono8/10/12
Gain	X1~X4
Exposure Time	1.5μs~6553.5μs
Dimensions	125mmx60mmx28.5mm(not including lens mount and rear case connector)
Flat Field Correction	Support the import/export of correction result
Weight	360g
Power Supply	DC power supply by Hirose connector, with voltage range from 12V to 24V
Lens Mount	F\T2\M42×1
Power Consumption	7.5W
Temperature	Storage temperature:-30° C~ + 80° C; Operation temperature:-30° C~+50° C

Spectrogram

L5083MK100-4E

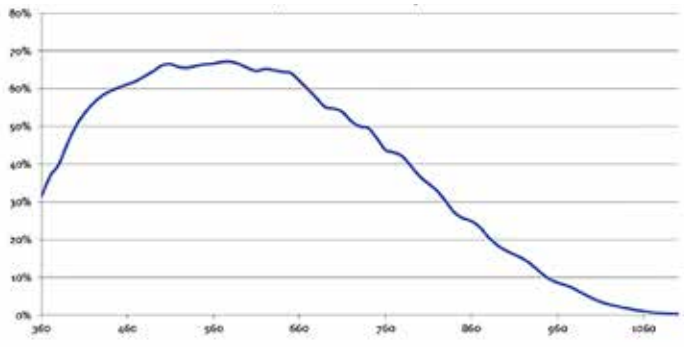

Quantum Efficiency Curve for Mono Sensor

Dimensions

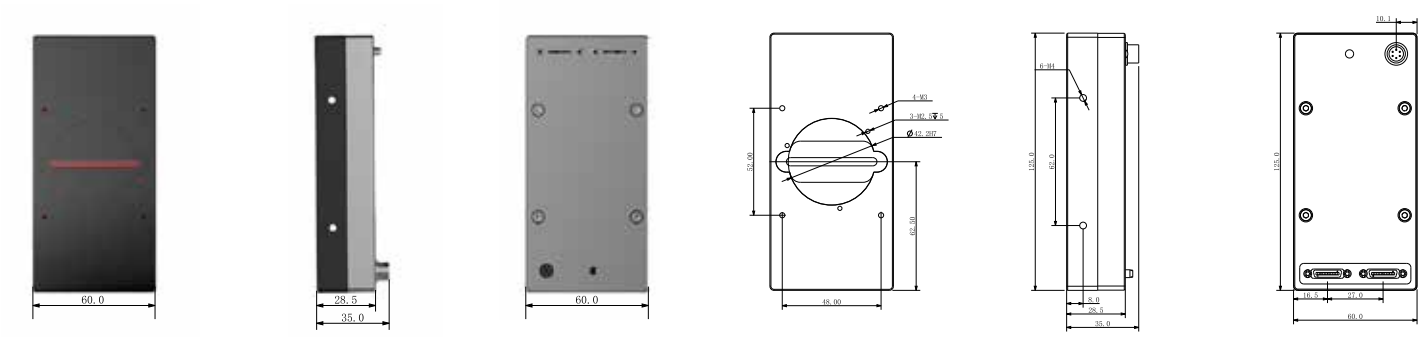

IO Interface Instruction

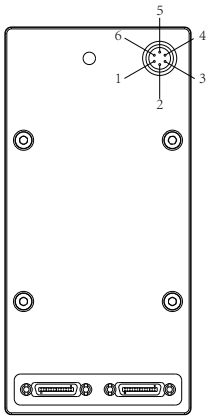

Pin	Signal	Description
1	Power	DC 12V-24V input
2	Power	DC 12V-24V input
3	Power	DC 12V-24V input
4	GND	Ground
5	GND	Ground
6	GND	Ground

CAM-DHUA27-08/2019 · Subject to technical change without notice. No liability is accepted for errors which may be contained in this document.