DH-MV-R5131MG000E



- Global shutter, CMOS series product
- 512MB RAM & 512MB non-volatile flash
- Software trigger/Hardware trigger/Free run mode
- Industrial grade M12 connector, IP 65 protection level
- Abundant algorithm functions support various of code types
- Supports RS232/485, 3 Opto-isolated inputs, 3 Opto-isolated outputs

Specification

Model	Sensor	Sensor type	Shutter	Resolution	Frame rate (fps)	Bit depth	Interface	Mono/Color	Pixel size (μm)	Sensor size
DH-MV-R5131MG000E	Python1300	CMOS	Global	1280x1022	60	10	GigE	Mono	4.8x4.8	1/2"

Model	DH-MV-R5131MG000E
Effective Pixels	1.3MP
SNR	>38dB
Dynamic Range	60dB
Ethernet Protocols	TCP/IP
GPIO	3 input without opto isolation, 3 output without opto isolation
Image Format	Mono8
Gain	X1~X16
Gamma	Range from 0 to 4, support LUT
Exposure Time	4μs~1s
Trigger Mode	Software trigger/Hardware trigger/Free run mode
User Setting	Support two sets of user-defined configurations
Dimensions	46mm x 60mm x 116.5mm
Weight	<2kg
Lens mount	Support C-mount, M12 mount and optional built-in illumination
Power Supply	Support 24V DC power supply
LED indicator	5 multifunctional indicators(TBD)
Lens	16mm (6/8/12/25/35mm optional), support C / M12 mount
LED light	Built in white led light
Embedded algorithm	Support code reading: 1D code (CODE128/EAN8/EAN13/CODE39/CODE93/CODEBAR/ITF25) and 2D code (DM/QR/VERICODE)
Power Consumption	<25W
Temperature	Storage temperature:-30° C~ + 80° C; Operation temperature: -20° C~+50° C

Rev 001.001 2018 Dahua. All rights reserved. Design and specifications are subject to change without notice.

Spectrogram

R5131MG000E

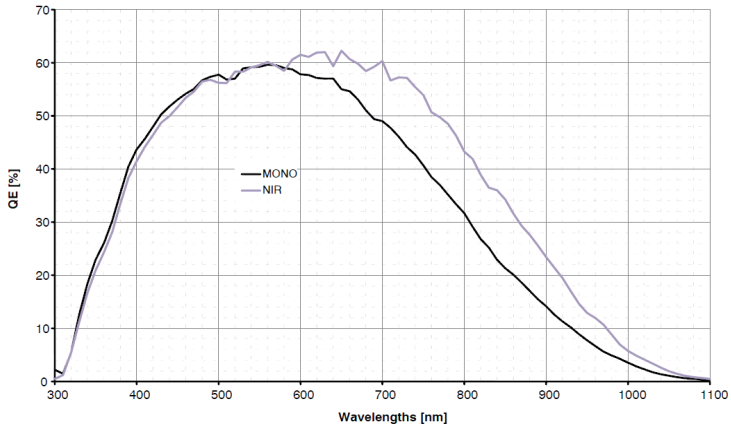

Quantum Efficiency Curve for Mono Sensor

Dimensions

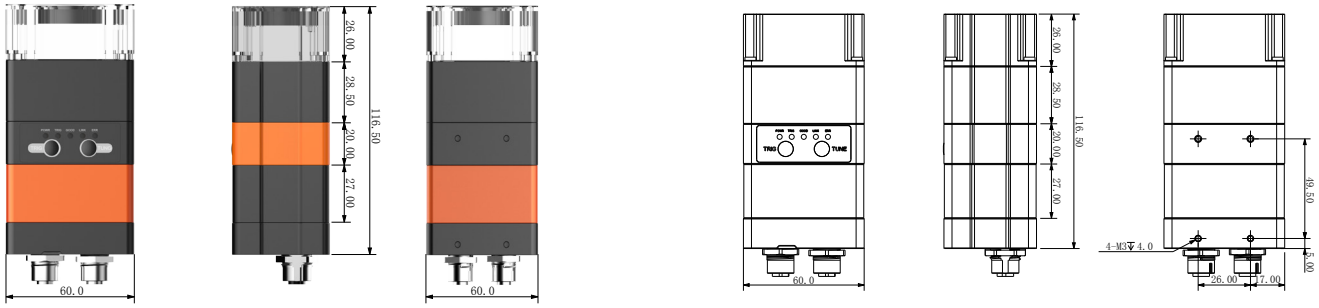

IO Interface Instruction

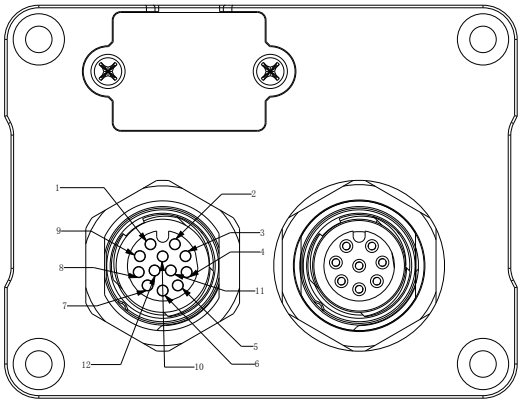

Pin	Signal	Description
1	OPT_IN1	Opto-isolated input 1
2	OPT_IN2	Opto-isolated input 2
3	OPT_OUT1	Opto-isolated output 1
4	OPT_OUT2	Opto-isolated output 2
5	RXD RS232	Serial port input
6	OPT_IN_GND	Opto-isolated in ground
7	POWER	DC 24V input
8	GND	Power ground
9	OPT_OUT_GND	Opto-isolated out ground
10	OPT_IN0	Opto-isolated input 0
11	OPT_OUT0	Opto-isolated output 0
12	TXD RS232	Serial port output