DH-MV-SI5201MG000/1E



- Powerful intel platform, easy for secondary development
- 4G/8G memory and 64G/128G SSD internal storage
- Software trigger/Hardware trigger/Free run mode
- Industrial grade M12 connector
- 1Gbps Ethernet industrial interface, max 100m transmission

Specification

Model	Sensor	Sensor type	Shutter	Resolution	Frame rate (fps)	Bit depth	Interface	Mono/Color	Pixel size (μm)	Sensor size
DH-MV-SI5201MG000E	Python 2000	CMOS	Global	1920*1200	150	12	GigE	Mono	4.8x4.8	2/3"
DH-MV-SI5201MG001E	Python 2000	CMOS	Global	1920*1200	150	12	GigE	Mono	4.8x4.8	2/3"

Model	DH-MV-SI5201MG000E	DH-MV-SI5201MG001E
Effective Pixels	2MP	
Operating System	Win 10 X64 OS	
Processor	Intel Apollo Lake platform	
SNR	>38dB	
Dynamic Range	60dB	
Interface	3 physical interface: 1 GigE, 1 GPIO, 1 VGA & 1 USB port	
GPIO	12 pins IO interface: 3 input without opto isolation, 3 output without opto isolation	
Image Format	Mono8/10/12	
Gain	X1~X6	
Gamma	Range from 0 to 4, support LUT	
Memory	LPDDR4 4G Byte	LPDDR4 8G Byte
Storage	Internal storage: 64GB SSD	Internal storage: 128GB SSD
Exposure Time	16μS~1S	
Trigger Mode	Software trigger/Hardware trigger/Free run mode	
User Setting	Support two sets of user-defined configurations	
Dimensions	69mm x 117mm x 62mm	
Weight	<2kg	
LED indicator	5 status indicators: 1 system, 2 network and 2 user configurable indicators	
Lens Mount	Support C / M12 mount	
Power Supply	Support 24V DC power supply	
Power Consumption	≤30W	
Temperature	Storage temperature:-30° C~ + 80° C; Operation temperature: 0° C~+50° C	

Rev 001.001 2018 Dahua. All rights reserved. Design and specifications are subject to change without notice.

Spectrogram

SI5201MG000E

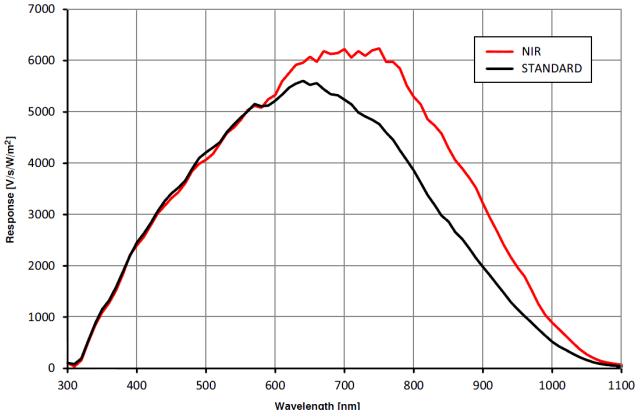

Quantum Efficiency Curve for Mono Sensor

SI5201MG001E

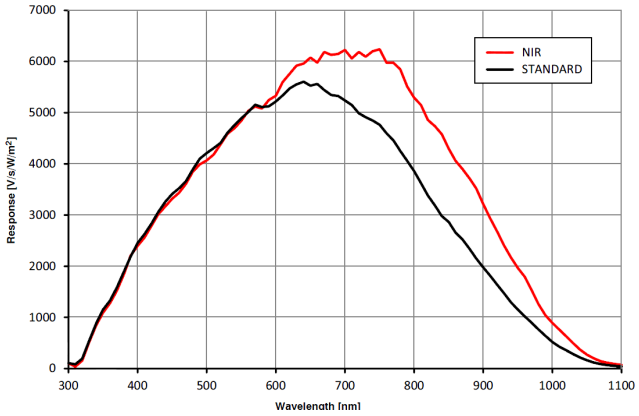

Quantum Efficiency Curve for Mono Sensor

Dimensions

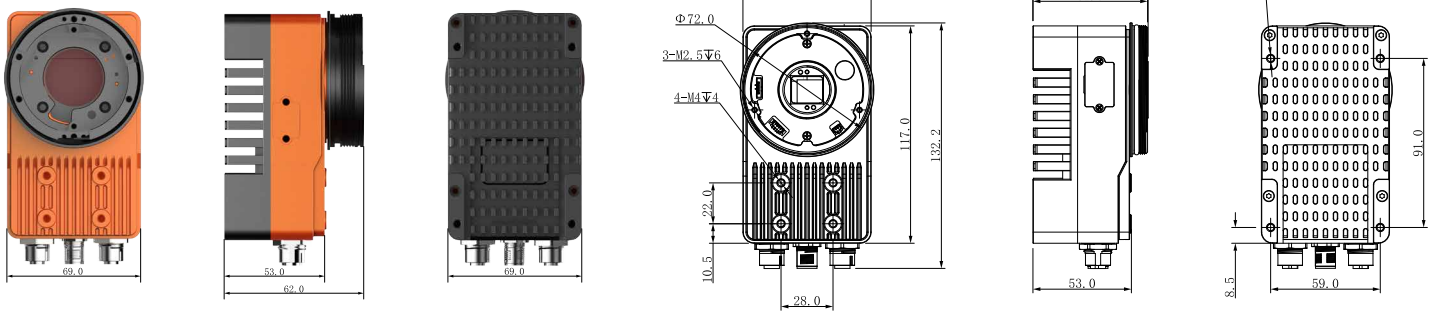

IO Interface Instruction

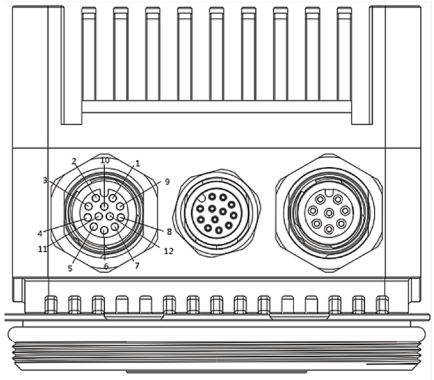

Pin	Signal	Description
1	OPT_IN1	Opto-isolated input 1
2	OPT_IN2	Opto-isolated input 2
3	OPT_OUT1	Opto-isolated output 1
4	OPT_OUT2	Opto-isolated output 2
5	RXD RS232	Serial port input
6	OPT_IN_GND	Opto-isolated in ground
7	Power	DC 24V input
8	GND	Power ground
9	OPT_OUT_GND	Opto-isolated out ground
10	OPT_IN0	Opto-isolated input 0
11	OPT_OUT0	Opto-isolated output 0
12	TXD RS232	Serial port output