CQ-L-8,5-1,2-A 8.5mm f/1.2 Optical Athermalized Infrared Lens

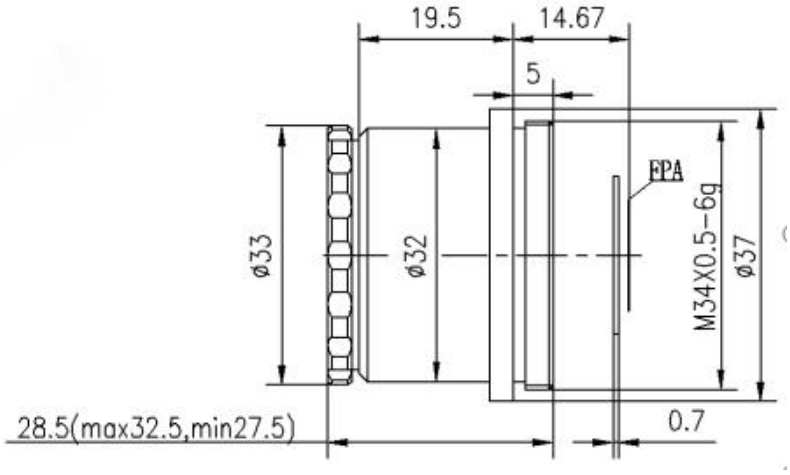

HFOV	160x120	320x240	336x256	384x288	640x480	640x512
17μm	18.2 °	35.5 °	37.1 °	42.0 °	65.2 °	90.0°
12μm	12.9 °	25.5 °	26.7 °	30.3 °	48.6 °	48.6 °

Optical

Focal Length	8.5mm
F/#	1.2
Wavelength	8-12μm
Format	Ø14

Mechanical

Interface	Thread
Focus Mechanism	Fixed Athermalized
Dimensions (mm)	Ø34× 28.5
Weight	<56g

Environmental

Sealing	IP67
Operating Temperature	-40°C to +80°C
Storage Temperature	-45°C to +85°C
External Coating	AR