NA-L-6,5-1,0-A

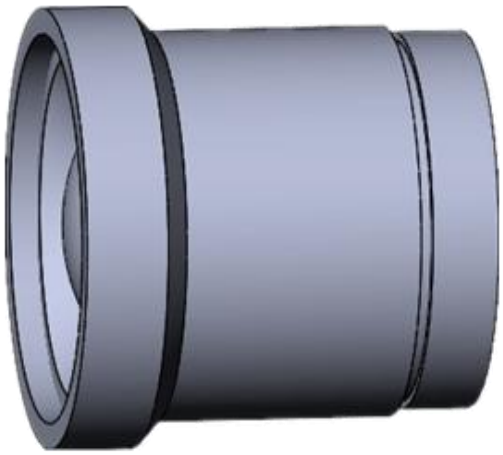

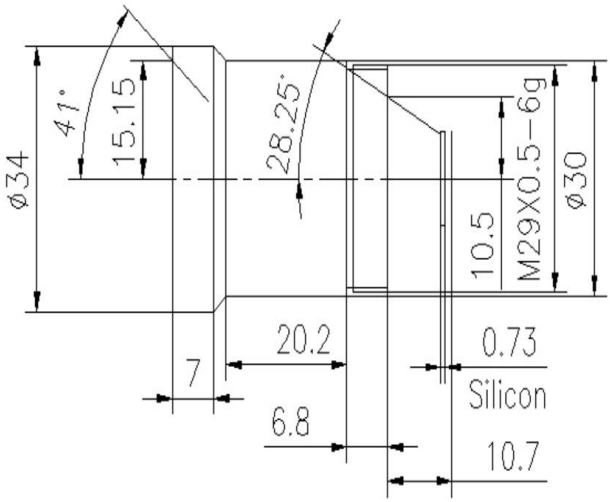

HFOV	384×288	640×512
17μ	53.3°	79.8°
12μ		61.2°

Property	Value
Optical	
Focal Length (mm)	6.5
F/#	1.0
Average Transmission(8~12μm)	91%
Detector	uncooled
Back Focal Length (mm)	10.7
Mechanical	
Focus Mechanism	Athermalized
Focus Range	0.3m~infinity
Weight (gr)	54
Max. Dimensions (Diameter×Length)	34×34mm
Supply voltage(DC V)	/
Environmental	
Operating Temperature (℃)	-30 to +60
Storage Temperature (℃)	-40 to +60
Sealing (Front lens only)	IP67
Configurations	
NA-L-6,5-1,0-A-01	DLC
NA-L-6,5-1,0-A-02	AR