A3514MG000E

Product Features

Gigabit Ethernet interface, providing 1Gbps bandwidth with a maximum transmission distance of 100m;
128MB on-board cache for data transmission or image resend;
Support Software Trigger/Hardware Trigger/Free Run Mode;
Support ISP functions including Sharpness/Denoising/Gamma/LUT/BlackLevel Correction/TargetBrightness/Contrast etc.;
Support multiple image data formats output/ROI/Binning/Mirror, etc.;
Conform to GigE Vision V2.0 protocol and GenICam standard;
Support PoE power supply, DC 9V~24V wide voltage power supply;



Dimensions (mm)

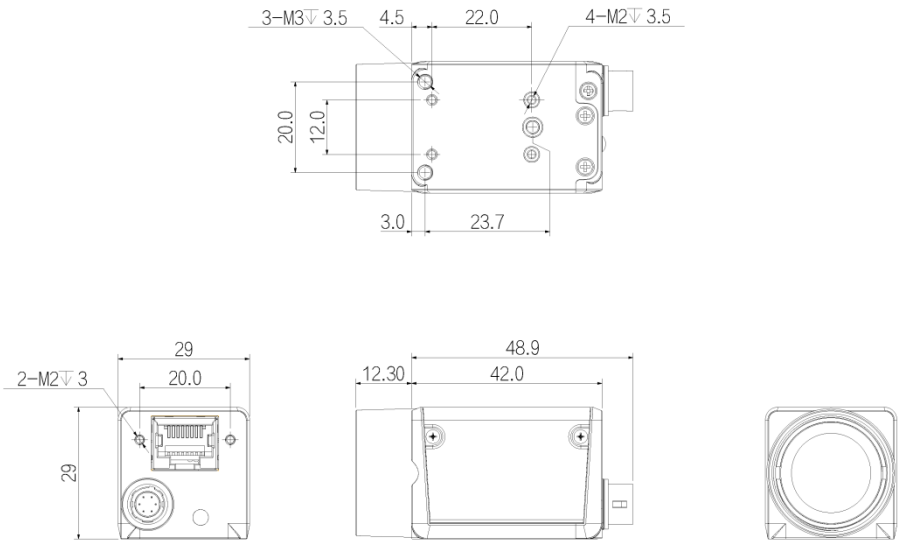

© 2021 iRAYPLE. All rights reserved. Design and specifications are subject to change without notice. Pictures in the document are for reference only, and the actual product shall prevail.

Technical Specifications

Model Name	A3514MG000E
Binning	Support
Bit Depth	10
Gain	1~32
Frame Rate	14
GPIO Interface	1x 6 pin Hirose: 1x Opto-isolated input, 1x Opto-isolated output
Gamma	From 0 to 4 , support LUT
Image Buffer	64MB
Image Format	Mono8/10/10Packed/12/12Packed
Image Sensor	1/2.5"CMOS
Lens Mount	C-mount
Mono/Color	Mono
Pixel	5.0MP
Pixel Size	2.2 x 2.2
Port	GigE, PoE
Power Consumption	12V≈3.3W
Power Supply	PoE/DC 9V~24V power supply via Hirose interface
Product Dimensions	29mm*29mm*42mm
ROI	Support
Resolution	2592 x 1944
S/N Ratio	>38dB
SPC	Support
Sensor	MT9P031
Shutter	Rolling
Trigger Mode	Software Trigger/Hardware Trigger/Free Run Mode
User Setting	Support two sets of user-defined configurations
WDR	Support DOL-HDR
Weight	88g
Working Environment	Storage: - 30℃~+80℃ ; Operation: - 30℃~+50℃

© 2021 iRAYPLE. All rights reserved. Design and specifications are subject to change without notice. Pictures in the document are for reference only, and the actual product shall prevail.